SXYxC 3 axes / ZSC

● Clean type ● Cable duct ● Z-axis shaft vertical type

Ordering method

SXYxC -	D	-		-		-		-	15	-		-	RCX340-3	-		-		-		-		-		-	
Model	Cable	Combination	X axis stroke	Y axis stroke	ZR axis	Z axis stroke	Cable length	Controller / Number of controllable axes	Safety standard	Option A (OP.A)	Option B (OP.B)	Option C (OP.C)	Option D (OP.D)	Option E (OP.E)	Absolute battery
	D: Cable duct	T1 T3	15 to 105cm	15 to 65cm	ZSC12 ZSC6		3L: 3.5m 5L: 5m 10L: 10m								

Specify various controller setting items. RCX340 ▶ P.678

Basic specifications

	X axis	Y axis	Z axis: ZSC12	Z axis: ZSC6
Axis construction Note 1	C14H	C14	–	
AC servo motor output (W)	200	100	60	
Repeatability Note 2 (mm)	+/-0.01	+/-0.01	+/-0.02	
Drive system	Ball screw ϕ15	Ball screw ϕ15	Ball screw ϕ12	
Ball screw lead Note 3 (Deceleration ratio) (mm)	20	20	12	6
Maximum speed Note 4 (mm/sec)	1000	1000	1000	500
Moving range (mm)	150 to 1050	150 to 650	150	
Robot cable length (m)	Standard: 3.5 Option: 5, 10			
Degree of cleanliness	CLASS 10 Note 5			
Intake air (Nℓ/min)	90 Note 6			

Note 1. Use caution that the frame machining (installation holes, tap holes) differs from single-axis robots'.
Note 2. Positioning repeatability in one direction.
Note 3. Leads not listed in the catalog are also available. Contact us for details.
Note 4. When the X-axis stroke is longer than 850mm, resonance of the ball screw may occur depending on the operation conditions (critical speed). In this case, reduce the speed setting on the program by referring to the maximum speeds shown in the table below.
Note 5. Per 1cf (0.1μm base), when suction blower is used.
Note 6. The necessary intake amount varies depending on the use conditions and environment.

Maximum payload (kg)

Y stroke (mm)	ZSC12	ZSC6
150 to 650	3	5

Controller

Controller	Operation method
RCX340	Programming / I/O point trace / Remote command / Operation using RS-232C communication

SXYxC 3 axes / ZSC T1

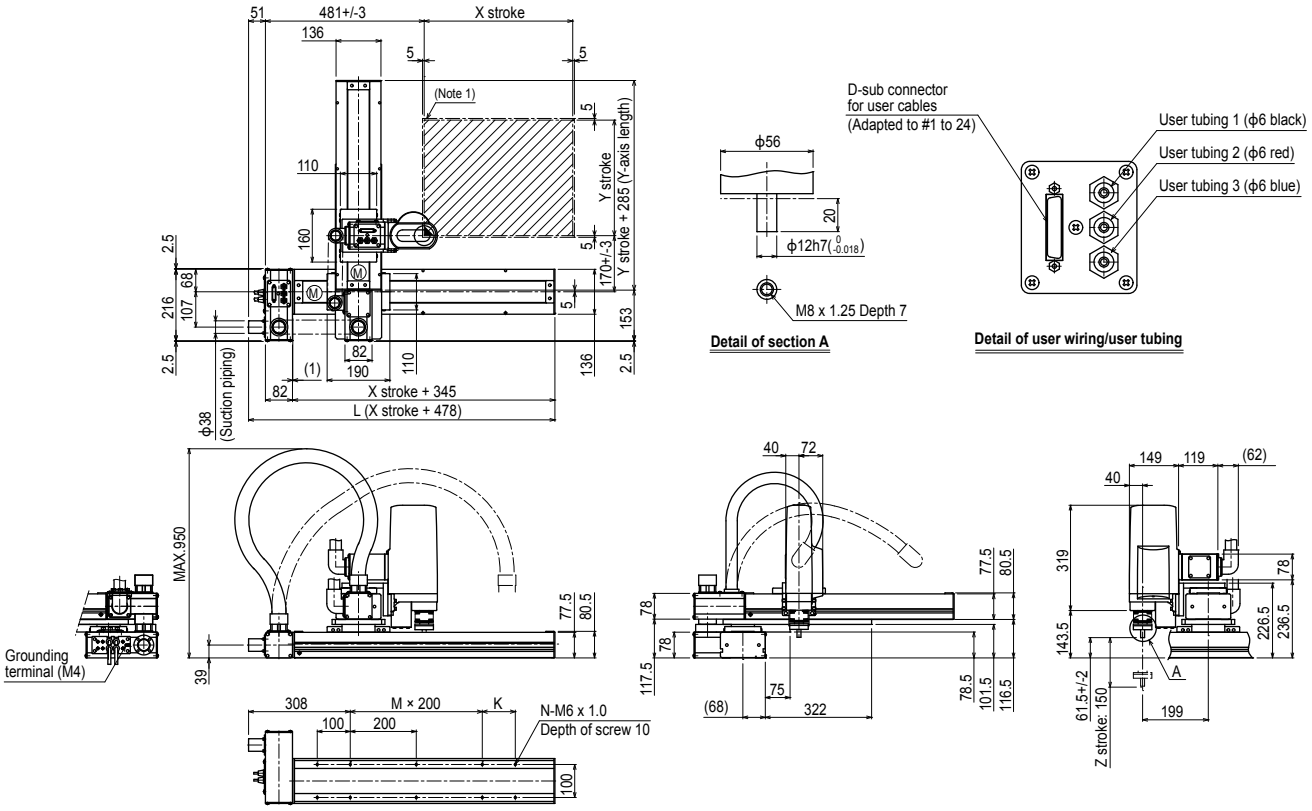

X stroke	150	250	350	450	550	650	750	850	950	1050
L	628	728	828	928	1028	1128	1228	1328	1428	1528
K	200	100	200	100	200	100	200	100	200	100
M	0	1	1	2	2	3	3	4	4	5
N	6	8	8	10	10	12	12	14	14	16

Y stroke	150	250	350	450	550	650
Z stroke	150					

Maximum speed for each stroke (mm/sec) Note 2					
X axis	1000	800	650	550
Speed setting	–	80%	65%	55%

Note 1. The moving range when returning to origin and the stop position when stopping by mechanical stopper.

Note 2. When the X-axis stroke is longer than 850mm, resonance of the ball screw may occur depending on the operation conditions (critical speed). In this case, reduce the speed setting on the program by referring to the maximum speeds shown in the table at the left.

SXYxC 3 axes / ZSC T3

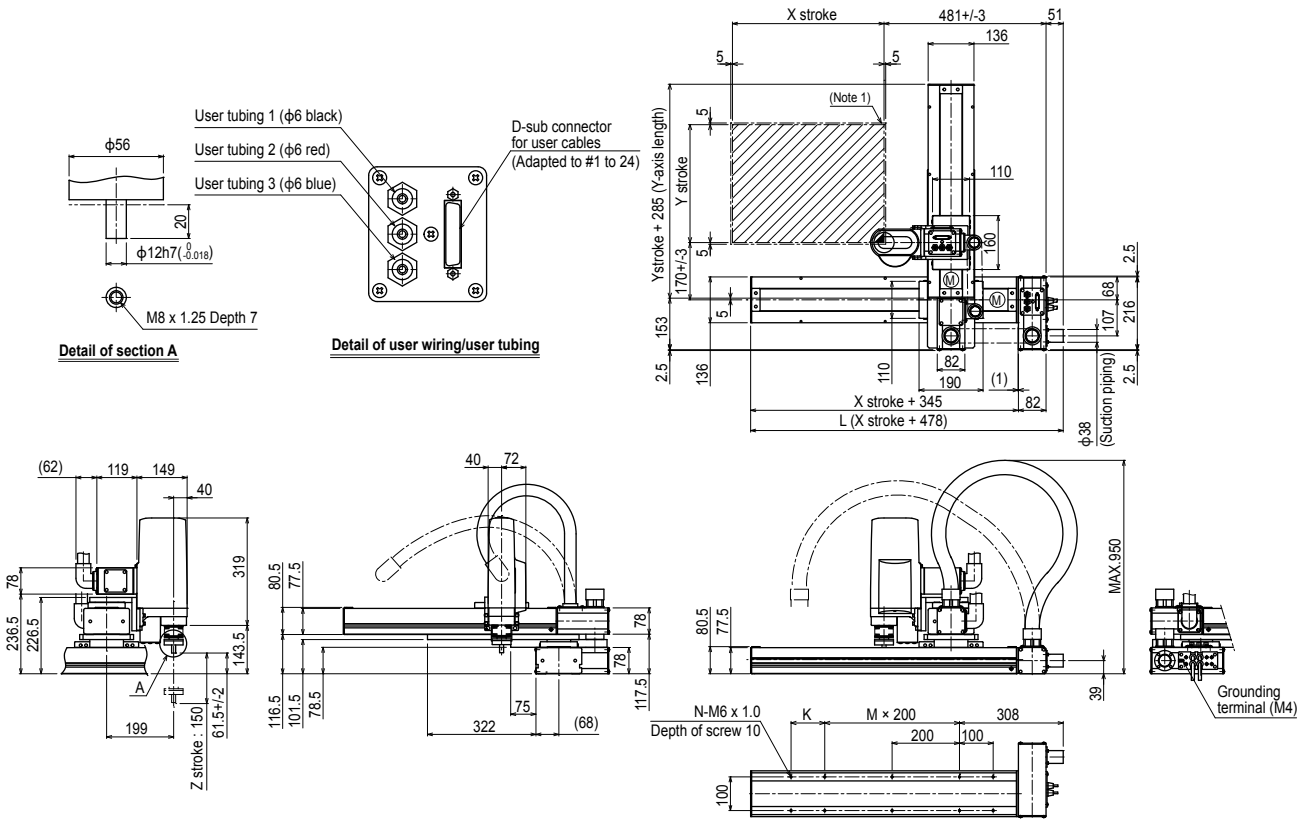

X stroke	150	250	350	450	550	650	750	850	950	1050
L	628	728	828	928	1028	1128	1228	1328	1428	1528
K	200	100	200	100	200	100	200	100	200	100
M	0	1	1	2	2	3	3	4	4	5
N	6	8	8	10	10	12	12	14	14	16

Y stroke	150	250	350	450	550	650

Z stroke	150

Maximum speed for each stroke (mm/sec) Note 2					
X axis	1000	800	650	550
Speed setting	–	80%	65%	55%

Note 1. The moving range when returning to origin and the stop position when stopping by mechanical stopper.

Note 2. When the X-axis stroke is longer than 850mm, resonance of the ball screw may occur depending on the operation conditions (critical speed). In this case, reduce the speed setting on the program by referring to the maximum speeds shown in the table at the left.